SHOP NOTE

ALL NOZZLES TO BE INSTALLED TO TRUE VERTICAL AND HORIZONTAL CENTRE LINES

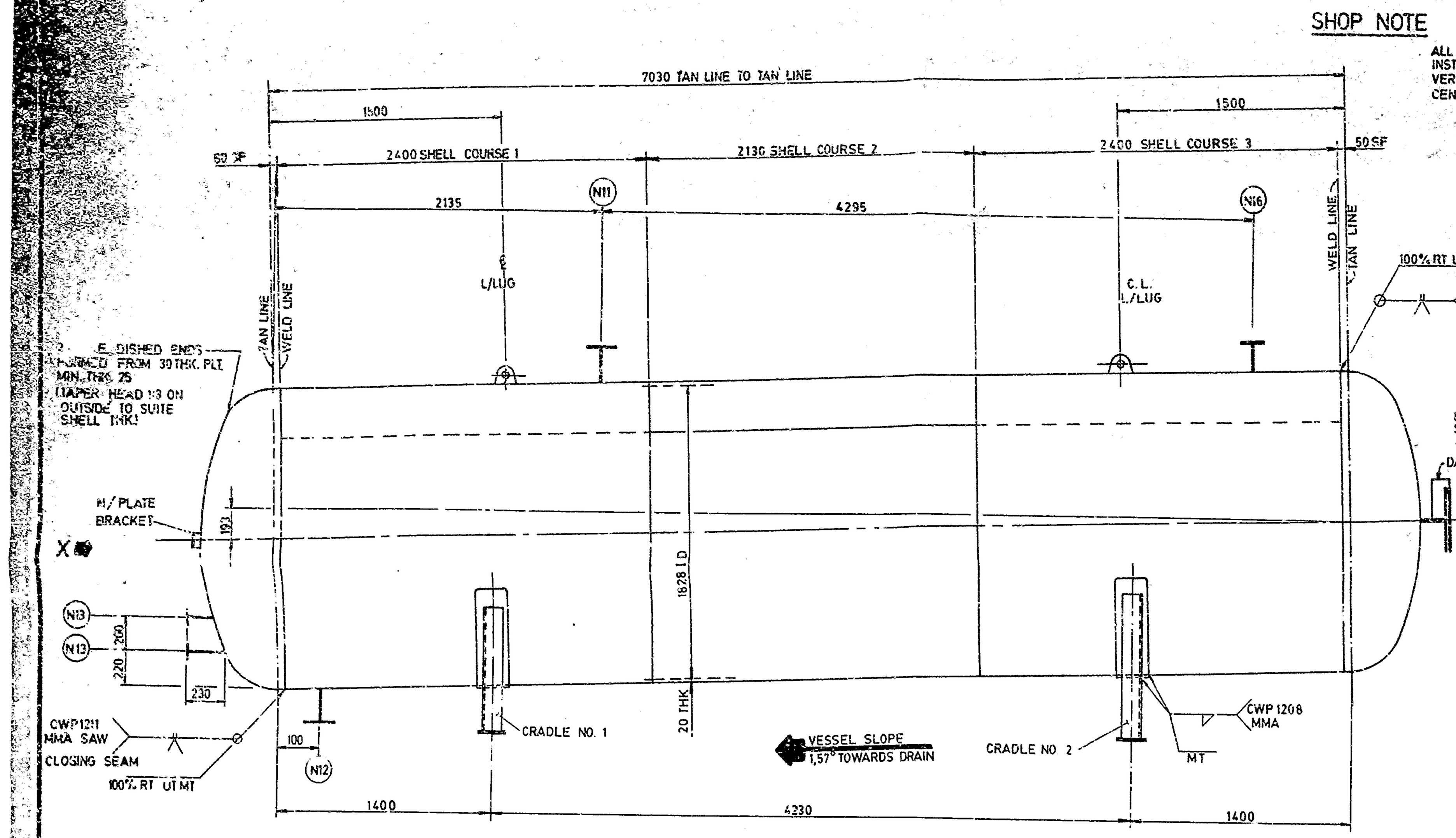

ELEVATION
4-VESSELS REQ'D.

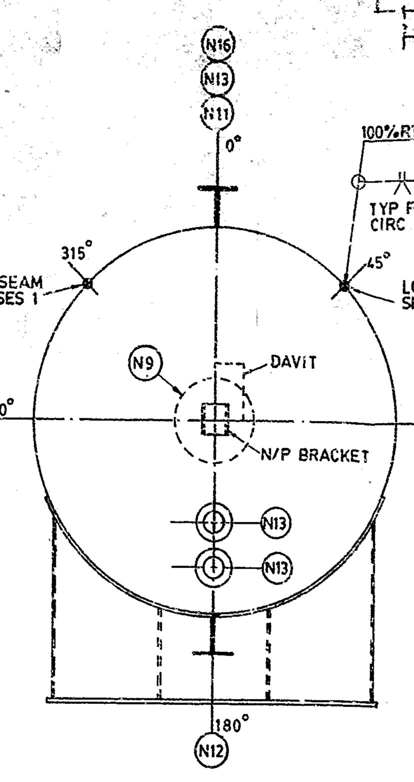

VIEW ON ARROW X

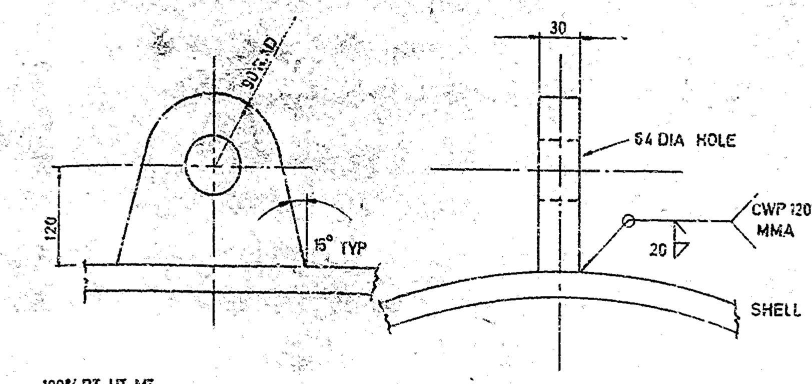

DETAIL OF L/LUG
MAT'L: BS 1501 151 430A

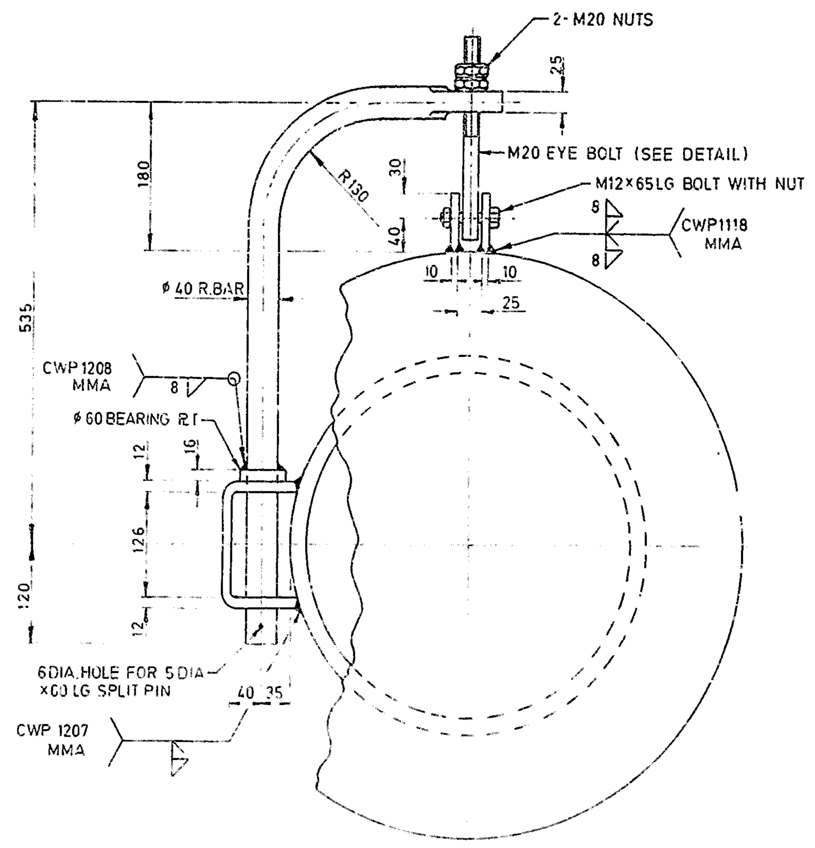

ELEVATION

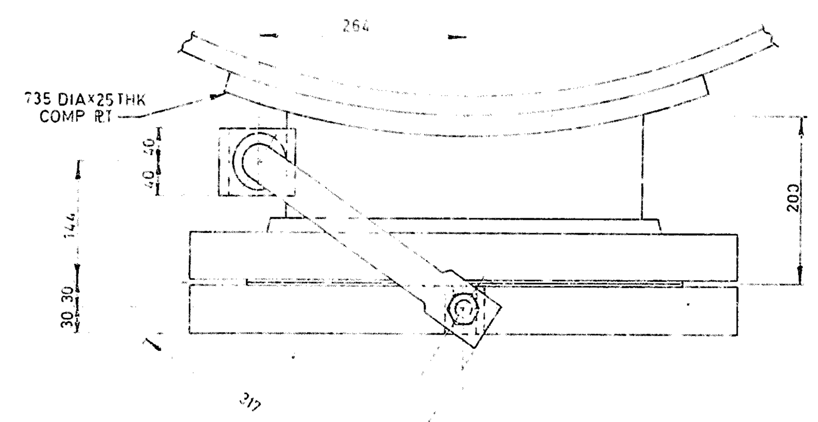

PLAN

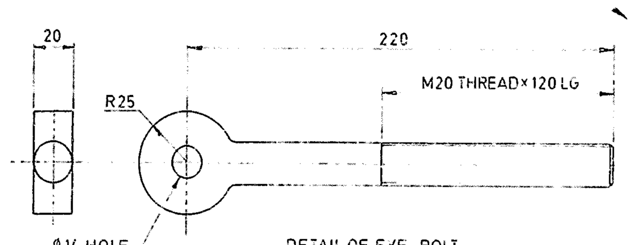

DETAIL OF EYE BOLT
1-REQ'D MAT'L-BS4360-43A

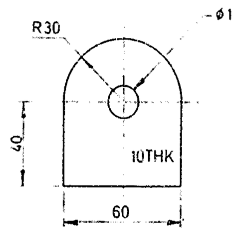

DETAIL OF EYE BOLT LUGS
2-REQ'D MAT'L-BS4360-43A

ASSEMBLY AND DETAILS OF MANWAY DAVIT

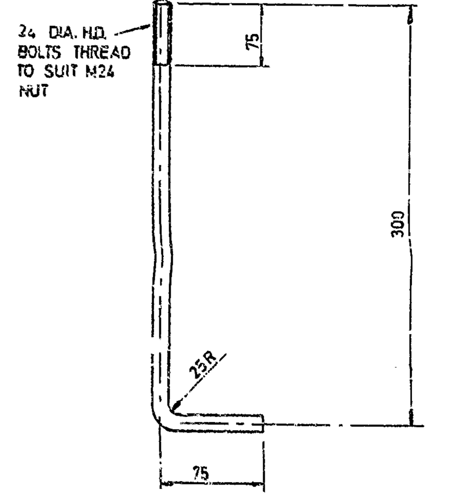

DETAIL OF H/D. BOLT
MAT'L: BS 4360 43A 4 OFF REQ'D. PER VESSEL

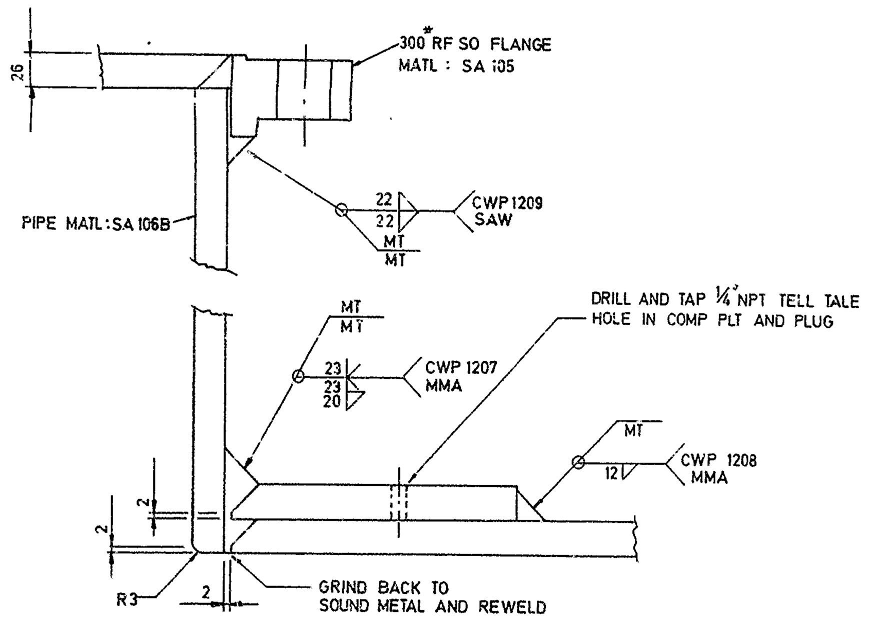

WELD DETAIL FOR NOZZLE N9

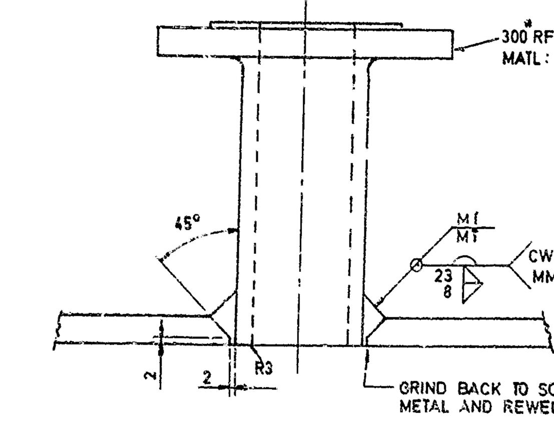

TYP. WELD DTL. FOR NOZZLES
N11 N12 N13 N16

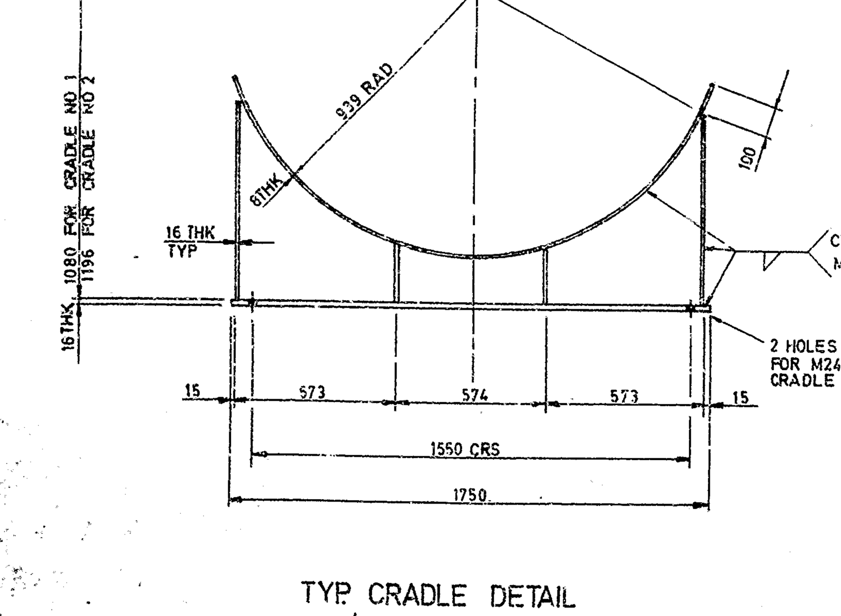

TYP. CRADLE DETAIL
MATL.: BS 4360-43A

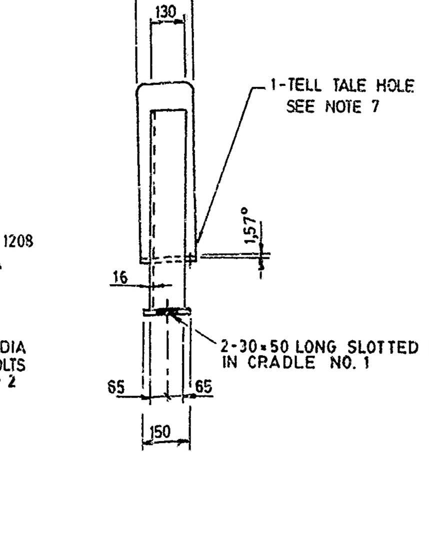

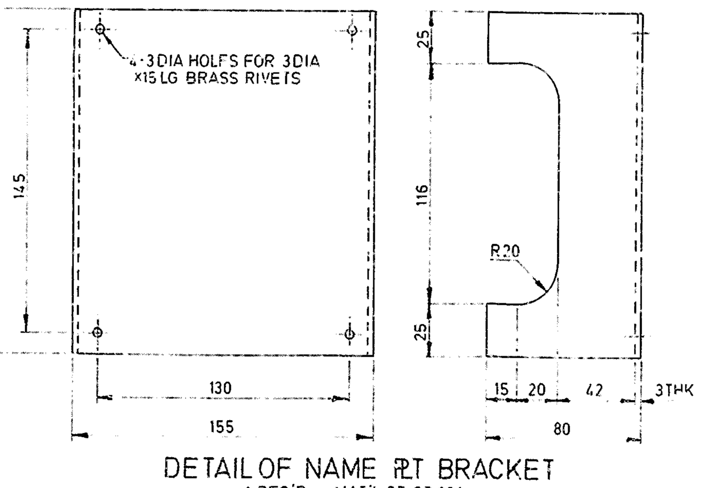

DETAIL OF NAME PLT BRACKET
1-REQ'D MAT'L ST. ST. 304

VESSEL IN HYDROGEN SERVICE
ALL APPURTENANCES MUST BE WELDED TO SHELL WITH FULL PENETRATION WELDS

CYCLOP ENGINEERING (PTY.) LTD.
CERTIFIED FINAL
SIGNED
DATE

FABRICATION PROCEDURE SEQUENCE

A) AFTER VESSEL FABRICATION IS COMPLETED ALL CIRCUMFERENTIAL AND LONGITUDINAL MAIN WELD SEAMS ARE TO BE GROUND SMOOTH INSIDE AND OUTSIDE.
B) ALL MAIN WELD SEAMS THEN TO BE 100% X-RAYED.
C) ALL MAIN SHELL WELDS TO BE 100% MAG PARTICLE TESTED INSIDE AND OUTSIDE.
D) NOZZLE TO SHELL WELDS TO BE 100% MAG PARTICLE TESTED INSIDE AND OUTSIDE.
E) INTERNAL SURFACE OF VESSEL TO BE SAND BLASTED TO REDUCE EXCESSIVE SCALING DURING HEAT TREATMENT.
F) VESSEL TO BE STRESS RELIEVED AT 580°C TO 620°C FOR 2 MIN/mm 1-HOUR MIN
G) ON COMPLETION OF STRESS RELIEVING THE MAIN WELD SEAMS ARE TO BE 100% ULTRASONICALLY EXAMINED
H) ALL MAIN WELD SEAMS TO BE 100% MAG PARTICLE TESTED INSIDE AND OUTSIDE.
I) NOZZLE TO SHELL WELDS TO BE 100% MAG PARTICLE TESTED INSIDE AND OUTSIDE
J) VESSEL TO BE HYDRO TESTED TO 3810 kPag
K) CLEAN INTERNALLY AND SAND BLAST EXTERNALLY.
L) APPLY PAINT COATINGS AS PER PAINT SPEC OPPOSITE.
M) VESSEL SHELL TO BE MARKED:- "POST WELD TREATED - NO WELDING."

VESSEL DATA

DESIGN CODES: B.S. 5500 - 1982
DESIGN PRESSURE: 3030 kPag
DESIGN TEMPERATURE: -10°C TO +40°C
OPERATING PRESSURE: 2752 kPag
OPERATING TEMPERATURE: AMBIENT
STRESS RELIEVED: YES SEE NOTE 24 AND F
WELD EXAMINATION: SEE NOTES 12 & 16 100% RADIOGRAPHY
JOINT EFFICIENCY: SHELL 1.00 HEAD 1.00
CORROSION ALLOWANCE: 0
MAX. ALLOWABLE WORKING PRESSURE AT DESIGN TEMPERATURE: 3030 kPag
HYDROSTATIC TEST PRESSURE SHOP: 3810 kPag
FIELD TEST PRESSURE: 3810 kPag
BASIS FOR CALCULATED TEST PRESSURE
SHOP FIELD TEST LIMITED BY: SHELL
TYPE OF HEAD: 2:1 S.E. DISHED ENDS
PLATFORM AND LADDER CLIPS: NONE SHIPMENT: ONE PIECE
INSPECTION AUTHORITY: ESCOM AND
CONTENTS: HYDROGEN DENSITY: 0,0894 Kg/m³

PAINTING

INTERNALLY:- NIL SEE NOTE 12
EXTERNALLY:- SAND BLAST TO SA 2 1/2 & APPLY 1-COAT CORROCOTE No2 PRIMER FOLLOWED BY 1-COAT VINYL (HELDCOTE) PRIMER (WHITE)

MATERIAL SPECIFICATION SEE NOTE 23

SHELL: B.S. 1501-151-430A NORM. HEAD: B.S. 1501-151-430A NORM.
PIPE: ASTM A106-B NORM FABRICATED PIPE: N.A.
FLANGES: ASTM A105 NORM FABRICATED FLG'S: NA
COMPENSATION PLATE: B.S. 1501-151-430A NORM
INTERNALS: NONE
EXTERNAL APPURTENANCES: B.S. 1501-151-430AN / B.S. 4360-43A
EXTERNAL BOLTING: ASTM A193-B7 STUDBOLTS & ASTM A194-2H NUTS (UNC SERIES)
INTERNAL BOLTING: NONE
GASKETS: 3 THK CAF
~~LEGS~~/BASEPLATE/CHAIRS: B.S. 4360-43A
TRAYS: NONE FIREPROOFING: NONE

MASS		VOLUME	
OPERATING:	8613 Kg	TOTAL VOLUME:	20 m³
EMPTY:	8563 Kg	LESS FIXINGS:	
WITH WATER:	28563 Kg	HYDROGEN:	550 m³

NAMEPLATE DETAILS

MANUFACTURED IN RSA BY
CYCLOP ENGINEERING
(PTY) LTD

MAKERS No	M907/2
EQUIPMENT No	
PLANT REF No	
DESIGN PRESS/MAWP	3030 kPa / 3030 kPa
HYDRAULIC TEST PRESSURE	F 3810 kPa / S 3810 kPa
DESIGN TEMP	-10°C TO +40°C
CORR ALLOW	0 mm
RADIOGRAPHY	100%
HEAT TREATMENT	STRESS RELIEVED
CODE	BS 5500-1982
CAPACITY	20 m³
EMPTY WEIGHT	8563 Kg
YEAR BUILT 1983	DATE OF TEST
INSPECTION AUTHORITY	

GENERAL NOTES

1) ALL IN ACCORDANCE WITH CODE EXCEPT AS NOTED ON MATERIAL SPECIFICATION.
2) ALL WELDING TO BE CARRIED OUT BY CODED WELDERS.
3) MATERIALS TO BE IDENTIFIED, TEST CERTIFICATES REQUIRED AND CAST NUMBERS TRANSFERED BY INSPECTION AUTHORITY.
4) ALL WELDING SYMBOLS TO AMERICAN WELDING SOCIETY (A.W.S.)
5) NOZZLE OUTSTANDS ARE MEASURED FROM CENTRE LINE OF VESSEL U.O.S.
6) ALL BOLT HOLES TO STRADDLE HORIZONTAL, VERTICAL, NORTH, SOUTH, EAST & WEST CENTRE LINES UNLESS OTHERWISE STATED.
7) DRILL & TAP 1/4"NPT TELL TALE HOLE IN COMPENSATING PLATES AND TEST WITH AIR AND SOAP TO 105 kPa. TELL TALE HOLES TO BE FITTED WITH 1/4" NPT PLUGS
8) ALL DIMENSIONS IN MILLIMETRES U.O.S.
9) ALL GASKETS TO BE SELF LOCATING.
10) ONE SET OF GASKETS REQUIRED FOR TESTING TO BE SHIPPED IN PLACE
11) EDGES ON INSIDE DIA. OF FLUSH TRIMMED OPENINGS TO BE ROUNDED TO A MIN. OF 3mm RAD., EXCEPT PIPES LESS THAN 6mm THK. ROUNDED TO A RADIUS EQUAL TO ONE-HALF OF THE WALL THICKNESS.
12) VESSEL TO BE THOROUGHLY CLEANED INSIDE AND OUTSIDE AND TO BE FREE FROM GREASE, WELD SPATTER, SCALE, SLAG, RUST AND ANY OTHER FOREIGN MATTER.
13) ALL FLANGED CONNECTIONS TO BE BLANKED OFF WITH 6 THK. OFF CUT PLATES PRIOR TO TRANSPORTATION (4 BOLTS C/w NUTS PER COVER.)
14) ALL NOZZLE WELD - ENSURE FULL PENETRATION.
15) ALL ELEVATIONS TAKEN FROM MASTER REF. TANGENT LINE. U.O.S.
16) N.D.E. - MAG PARTICLE TESTING 100% MAG PARTICLE EXAMINATION SHALL BE PERFORMED FOR ALL COMPLETED NOZZLE ATTACHMENT WELD SURFACES. BACKSIDE ROOT OF DOUBLE PENETRATION WELDS SHALL BE FULLY EXAMINED PROIR TO WELDING. RANDOM EXAMINATION SHALL BE PERFORMED ON COMPLETED WELDS. RANDOM EXAMINATION IS DEFINED AS THE INSPECTION OF AT LEAST 5% OF SUBJECT WELDS INCLUDING A REPRESENTATIVE SAMPLE OF INTERSECTION WELD START AND STOPS AND AREAS REPRESENTATIVE OF GENERAL WELDS.
17) RADIOGRAPHY: IMAGE QUALITY INDICATORS SHALL BE OF THE WIRE TYPE IN CONFORMANCE WITH ISO RECOMMENDATION R-1027 EQUIVALENT TO DIN 54-109 (1962) AT CATEGORY ONE QUALITY LEVEL.
18) WELD IDENTIFICATION, POSITION MARKERS, REPAIR IDENTIFICATION AND WELDERS SYMBOL TO BE IN RADIOGRAPHIC IMAGES OF LEAD LETTERS AND REFERENCE MARKS MUST REMAIN IN POSITION UNTIL THE WELD HAS BEEN ACCEPTED.
19) TELL TALE HOLES TO BE TAPPED AT LEAST 45° OFF THE LONG T.L. AXIS OF VESSEL.
20) ALL EXTERNAL MACHINED SURFACES TO BE COATED WITH A HEAVY SOLUTION RUST PREVENTATIVE PRIOR TO DESPATCH.
21) ALL MAIN SHELL WELD PREP FACES TO BE 100% MAG PARTICLE EXAMINED PRIOR TO TACK WELDING TOGETHER
22) ALL FORGED FLANGES TO BE 100% ULTRASONICALLY OR MAG PARTICLE EXAMINED IN THE WELD PREP REGION PRIOR TO WELDING.
23) MATERIAL TO BE ULTRASONICALLY SCANNED AT PLATE MILL.
24) HEADS TO BE NORMALIZED AFTER DISHING AND ULTRASONIC SCANNING (COUPON PLATE REQD)
25) IMPACT TESTING REQD ON PRODUCTION TEST PLATES

APPLICABLE NON DESTRUCTIVE EXAMINATION.
(SEE NOTES 16 & 17)

PRESS. COMPONENTS AND MATERIALS	RADIOGRAPHY	LIQUID PENETRANT	MAGNETIC PARTICLE	ULTRASONIC	BRINELL HARDNESS
SHELL WELD METAL	X		X	X	X
HEAD WELD METAL	X		X	X	X
FORGINGS FLANGE TO PIPE	X		X		
NOZZLE NECKS AND PIPES					
APPURTENANCES			X		
CLADDING					
HEAT AFFECTED ZONE					X

APPLICABLE DESTRUCTIVE EXAMINATION.

PRESSURE COMPONENTS AND MATERIALS	TENSILE ALL	TENSILE TRANS.	FACE BEND	ROOT BEND	MACRO	IMPACT TEST
SHELL PLATE/WELD METAL						X
NOZZLE NECKS AND PIPES						
APPURTENANCES WELDMETAL						
HEAT AFFECTED ZONE						
HEAD COUPON PLATE		X				

VESSEL TOLERANCES

1) DIAMETER = ±3 mm
2) STRAIGHTNESS = 1mm PER 1000mm MAX. 6 FOR TOTAL LENGTH.
3) LENGTH = ±8 mm
4) JOINT ALIGNMENT = GREATER OF 1mm OR 'T' DIVIDED BY 10 MAX. 3mm
5) NOZZLE ELEVATIONS = ±5mm
6) NOZZLE PROJECTIONS = ±5mm FROM C.L. OF VESSEL.
7) ALIGNMENT OF FLANGE FACE TO PLANE = ONE HALF DEGREE IN ANY DIRECTION.
8) RADIAL ORIENTATION = ±1,0° MAX. CIRC. TOL. 10mm
9) BOLT HOLE ORIENTATION = MAX. ROTATION 2° OR 1,5 mm MEASURED AT BOLT P.C.D.
10) NOZZLES FOR LEVEL INDICATORS = C.L. TO C.L. ±1,5 mm.

CONNECTION SCHEDULE

CONN NO.	NO. REQD	SIZE N.B.	RATING ANSI B16.5	NECK THK	SCH. PIPE	SERVICE	OUTSTAND NOTE 5	COMPENSATING PLATE
N16	1	80	300# RF/LWN	20,6	NA	VENT	1120	N.A.
N13	2	15	300# RF/LWN	12,7	NA	LEVEL GAUGES	SEE DRG.	N.A.
N12	1	25	300# RF/LWN	14,3	NA	DRAIN	1120	N.A.
N11	1	25	300# RF/LWN	14,3	NA	INLET	1120	N.A.
N9	1	450	300# RF/SO	23,8	80	MANWAY C/W DAVIT	SEE DRG.	ø735x 25 THK

REFERENCE DRAWINGS

DRG. NO.	TITLE	DRG NO.	TITLE
061/9071	Rv1		

ESCOM 17-5-1983 CVKD

SCALE 1:1	REV.	DATE	BY	CHKD	DESCRIPTION
0 50 100 150	A	2-5-83	H.E.		LENGTH WAS 5486 TAN TO TAN - NOW 7030 CRADLE DIMENSIONS GENERALLY REVISED NOTES 23, 24 AND 25 ADDED - DESIGN AND TEST PRESSURES ALTERED

THIS DRAWING IS **NOT** TO BE SCALED.

THIS DRAWING IS THE PROPERTY OF
CYCLOP ENGINEERING (PTY) LTD
AND UNLESS AUTHORISED BY THEM MUST NOT BE PASSED ON OR REPRODUCED TO ANY THIRD PARTY.

CUSTOMER'S APPROVAL

DRAWING RECORDS TEKENINGLÊER

CYCLOP ENGINEERING (PTY.) LTD.

DRAWN BY: S. SPYRA	ENQUIRY NO. E3581	DATE: 28-4-83
TRACED BY:	JOB NO. M907/2	
CUSTOMER: EFCO FURNACES	ORDER No: 19335	

GENERAL ARRANGEMENT AND DETAILS
OF:- HYDROGEN STORAGE VESSEL
FOR:- TUTUKA POWER STATION

CHECKED	APPROVED	SCALE:	DRAWING NUMBER	REV.
		1:20 / 1:50	M907/2/1	A

MICROBOX